OPERATOR'S MANUAL 6662XX-XXX-C-V

INCLUDING: OPERATION, INSTALLATION AND MAINTENANCE

RELEASED: 9-30-16
REVISED: 2-08-19
(REV: E)

2" DIAPHRAGM PUMP

1:1 RATIO (METALLIC)

READ THIS MANUAL CAREFULLY BEFORE INSTALLING, OPERATING OR SERVICING THIS EQUIPMENT.

It is the responsibility of the employer to place this information in the hands of the operator. Keep for future reference.

SERVICE KITS

Refer to Model Description Chart to match the pump material options.
637434 for air section repair (see page 6).
637432-XXX for fluid section repair **with** seats (see page 4).
637432-XX for fluid section repair **without** seats (see page 4).

PUMP DATA

Models ..... see "Model Description Chart"
Pump Type ..... Metallic Air Operated Double Diaphragm
Material ..... see "Model Description Chart"
Weight . .666250, 666270 ..... 65.15 lbs (29.55 kgs)
666251, 66625B, 666271, 66627B ..... 125.44 lbs (56.9 kgs)
6662FX ..... 137.30 lbs (62.28 kgs)
Maximum Air Inlet Pressure ..... 120 psig (8.3 bar)
Maximum Material Inlet Pressure ..... 10 psig (0.69 bar)
Maximum Outlet Pressure ..... 120 psig (8.3 bar)
Maximum Flow Rate (flooded inlet) ... 172 gpm (651.0 lpm)
Displacement / Cycle @ 100psi
Standard Diaphragm ..... 1.35 gal (5.12 lit)
Maximum Particle Size ..... 1/4" dia. (6.4 mm)
Maximum Temperature Limits (diaphragm / ball / seal / seat material)
Nitrile ..... 10° to 180° F (-12° to 82° C)
Santoprene® ..... -40° to 225° F (-40° to 107° C)
PTFE ..... 40° to 225° F (4° to 107° C)
Dimensional Data ..... see page 8
Noise Level @ 70 psig, 60 cpm① ..... 85.3 dB(A)②

① Tested with 94810 muffler assembly installed.
② The pump sound pressure levels published here have been updated to an Equivalent Continuous Sound Level (LA_{eq}) to meet the intent of ANSI S1.13-1971, CAGI-PNEUROP S5.1 using four microphone locations.

NOTICE: All possible options are shown in the chart, however, certain combinations may not be recommended, consult a representative or the factory if you have questions concerning availability.

66625X-XXX-C-V
66627X-XXX-C-V

6662FX-XXX-C-V

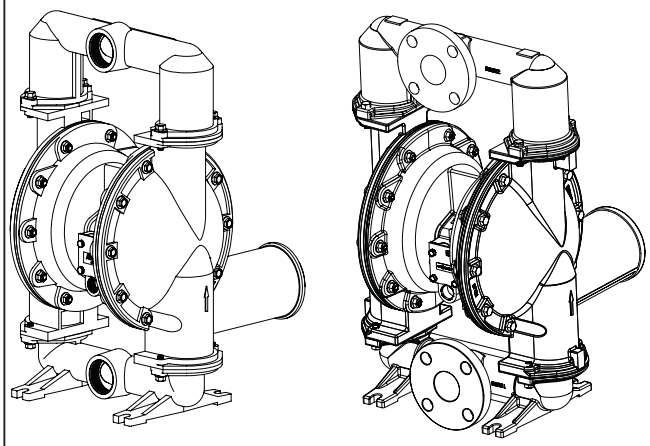

Figure 1

MODEL DESCRIPTION CHART

6662X X-X X X-C-V

Center Body Material
5 - Aluminum / 2 - 11-1/2 NPTF - 2
7 - Aluminum / Rp 2 (2 - 11 BSP parallel)
F - Aluminum / 2" ANSI / DIN Flange

Fluid Cap and Manifold Material / Hardware
0 - Aluminum / Carbon steel
1 - Stainless Steel / Carbon Steel
B - Stainless Steel / Stainless Steel

Seat Material
1- Aluminum
2 - 316 Stainless Steel
E - Santoprene

Ball Material
2 - Nitrile
4 - PTFE
E - Santoprene

DiaphragmMaterial
2 - Nitrile
4 - PTFE / Santoprene
B - Santoprene

FLUID SECTION SERVICE KIT SELECTION
EXAMPLE: MODEL # 66627B-244-C-V
Fluid Section Service Kit # 637432-44

6662XX-X X X-C-V
637432 - X X
BALL — DIAPHRAGM

INGERSOLL RAND COMPANY LTD
209 NORTH MAIN STREET – BRYAN, OHIO 43506
✆ (800) 495-0276 • FAX (800) 892-6276
© 2019
arozone.com

ARO Ingersoll Rand

OPERATING AND SAFETY PRECAUTIONS

READ, UNDERSTAND, AND FOLLOW THIS INFORMATION TO AVOID INJURY AND PROPERTY DAMAGE.

EXCESSIVE AIR PRESSURE
STATIC SPARK

HAZARDOUS MATERIALS
HAZARDOUS PRESSURE

⚠ WARNING EXCESSIVE AIR PRESSURE. Can cause personal injury, pump damage or property damage.

- Do not exceed the maximum inlet air pressure as stated on the pump model plate.
- Be sure material hoses and other components are able to withstand fluid pressures developed by this pump. Check all hoses for damage or wear. Be certain dispensing device is clean and in proper working condition.

⚠ WARNING STATIC SPARK. Can cause explosion resulting in severe injury or death. Ground pump and pumping system.

- Sparks can ignite flammable material and vapors.
- The pumping system and object being sprayed must be grounded when it is pumping, flushing, recircula ing or spraying flammable materials such as paints, solvents, lacquers, etc. or used in a location where surrounding atmosphere is conducive to spontaneous combustion. Ground the dispensing valve or device, containers, hoses and any object to which material is being pumped.
- Use the pump grounding screw terminal provided. Use ARO part no. 66885-1 ground kit or connect a suitable ground wire (12 ga. minimum) to a good earth ground source.
- Secure pump, connections and all contact points to avoid vibration and generation of contact or static spark.
- Consult local building codes and electrical codes for specific grounding requirements.
- Aftergrounding, periodically verify continuity of electrical-path to ground. Test with an ohmmeter from each component (e.g., hoses, pump, clamps, container, spray gun, etc.) to ground to ensure continuity. Ohmmeter should show 0.1 ohms or less.
- Submerse the outlet hose end, dispensing valve or device in the material being dispensed if possible. (Avoid free streaming of material being dispensed.)
- Use hoses incorporating a static wire.
- Use proper ventilation.
- Keep inflammables away from heat, open flames and sparks.
- Keep containers closed when not in use.

⚠ WARNING Pump exhaust may contain ontaminants. Can causesevere injury. Pipe exhaustaway from work area and personnel.

- In the event of a diaphragm rupture, material can be forced out of the air exhaust muffler.
- Pipe the exhaust to a safe remote location when pumping hazardous or inflammable materials.
- Use a grounded 3/4" minimum ID hose between the pump and the muffler.

⚠ WARNING HAZARDOUS PRESSURE. Can result in serious injury or property damage. Do not service or clean pump, hoses or dispensing valve while the system is pressurized.

- Disconnect air supply line and relieve pressure from the system by opening dispensing valve or device and / or carefully and slowly loosening and removing outlet hose or piping from pump.

⚠ WARNING HAZARDOUS MATERIALS. Cancauseserious injury or property damage.Donot attempt to return apumpto the factory or service center that contains hazardous material. Safe handling practices must comply with local and national laws and safety code requirements.

- Obtain Material Safety Data Sheets on all materials from the supplier for proper handling instructions. Obtain Material Safety Data Sheets on all materials from the supplier for proper handling instructions.

⚠ WARNING EXPLOSION HAZARD. Models containing aluminum wetted parts cannot be used with 1,1,1-trichloroethane, methylene chloride or other halogenated hydrocarbon solvents which may react and explode.

- Check pump motor section, fluid caps, manifolds and all wetted parts to assure compatibility before using with solvents of this type.

⚠ CAUTION Verify the chemical compatibility of the pump wetted parts and the substance being pumped, flushed or recirculated. Chemical compatibility may change with temperature and concentration of the chemical(s) within the substances being pumped, flushed or circulated. For specific fluid compatibility, consult the chemical manufacturer.

⚠ CAUTION Maximum temperatures are based on mechanical stress only. Certain chemicals will significantly reduce maximum safe operating temperature. Consult the chemical manufacturer for chemical compatibility and temperature limits. Refer to PUMP DATA on page 1 of this manual.

⚠ CAUTION Be certain all operators of this equipment have been trained for safe working practices, understand it's limitations, and wear safety goggles / equipment when required.

⚠ CAUTION Do not use the pump for the structural support of the piping system. Be certain the system components are properly supported to prevent stress on the pump parts.

- Suction and discharge connections should be flexible connections (such as hose), not rigid piped, and should be compatible with the substance being pumped.

⚠ CAUTION Prevent unnecessary damage to the pump. Do not allow pump to operate when out of material for long periods of time.

- Disconnect air line from pump when system sits idle for long periods of time.

⚠ CAUTION Use only genuine ARO replacement parts to assure compatible pressure rating and longest service life.

NOTICE Replacement warning labels are available upon request: "Static Spark" (93616-1) and "Diaphragm Rupture" (93122).

⚠ WARNING	=	Hazards or unsafe practices which could result in severe personal injury, death or substantial property damage.
⚠ CAUTION	=	Hazards or unsafe practices which could result in minor personal injury, product or property damage.
NOTICE	=	Important installation, operation or maintenance information.

GENERAL DESCRIPTION

The ARO diaphragm pump offers high volume delivery even at low air pressure and a broad range of material compatibility options are available. Refer to the model and option chart. ARO pumps feature stall resistant design, modular air motor / fluid sections.

Air operated double diaphragm pumps utilize a pressure differential in the air chambers to alternately create suction and a positive fluid pressure in the fluid chambers, valve checks insure a positive flow of fluid.

Pump cycling will begin as air pressure is applied and will continue to pump and keep up with the demand. It will build and maintain line pressure and will stop cycling once maximum line pressure is reached (dispensing device closed) and will resume pumping as needed.

AIR AND LUBE REQUIREMENTS

⚠WARNING EXCESSIVE AIR PRESSURE. Can cause pump damage, personal injury or property damage.

- A filter capable of filtering out particles larger than 50 microns should be used on the air supply. There is no lubrication required other than the "O" ring lubricant which is applied during assembly or repair.
- If lubricated air is present, make sure that it is compatible with the "O" rings and seals in the air motor section of the pump.

OPERATING INSTRUCTIONS

- Always flush the pump with a solvent compatible with the material being pumped if the material being pumped is subject to "setting up" when not in use for a period of time.
- Disconnect the air supply from the pump if it is to be inactive for a few hours.
- The outlet material volume is governed not only by the air supply, but also by the material supply available at the inlet. The material supply tubing should not be too small or restrictive. Be sure not to use hose which might collapse.
- When the diaphragm pump is used in a forced-feed (flooded inlet) situation, it is recommended that a "check valve" be installed at the air inlet.
- Secure the diaphragm pump legs to a suitable surface to insure against damage by vibration.

MAINTENANCE

Refer to the part views and descriptions as provided on pages 4 through 7 for parts identification and service kit information.

- Certain ARO "Smart Parts" are indicated which should be available for fast repair and reduction of down time.
- Service kits are divided to service two separate diaphragm pump functions: 1. AIR SECTION, 2. FLUID SECTION. The Fluid Section is divided further to match typical part Material Options.
- Provide a clean work surface to protect sensitive internal moving parts from contamination from dirt and foreign matter during service disassembly and reassembly.
- Keep good records of service activity and include the pump in preventive maintenance program.
- Before disassembling, empty captured material in the outlet manifold by turning the pump upside down to drain material from the pump.

FLUID SECTION DISASSEMBLY

1. Remove top manifold(s).
2. Remove (22) balls, (19) "O" rings (where applicable) and (21) seats.
3. Remove (15) fluid caps.

NOTE: Only PTFE diaphragm models use a primary diaphragm (7) and a backup diaphragm (8). Refer to the auxiliary view in the Fluid Section illustration.

4. Remove the (14) screw, (6) washer, (7) or (7 / 8) diaphragm and (5) washer.

NOTE: Do not scratch or mar the surface of (1) diaphragm rod.

FLUID SECTION REASSEMBLY

- Reassemble in reverse order.
- Clean and inspect all parts. Replace worn or damaged parts with new parts as required.
- Lubricate (1) diaphragm rod and (2) "O" ring with Key-Lube "O" ring lube.
- Install (2) "O" ring on (1) diaphragm rod.
- Be certain (7) or (7 / 8) diaphragms align properly with (15) fluid caps before making final torque adjustments on bolt and nuts to avoid twisting the diaphragms.
- For models with PTFE diaphragms: Item (8) Santoprene diaphragm is installed with the side marked "AIR SIDE" towards the pump center body. Install the PTFE diaphragm with the side marked "FLUID SIDE" towards the fluid cap.
- Check torque settings after the pump has been re-started and run a while.

• Loctite® is a registered trademark of Henkel Loctite Corporation •
• Santoprene® is a registered trademark of Monsanto Company, licensed to Advanced Elastomer Systems, L.P. • ARO® is a registered trademark of Ingersoll-Rand Company •
• 262™, 271™ and 572™ are trademarks of Henkel Loctite Corporation •

PARTS LIST / 6662XX-XXX-C-V FLUID SECTION

Fluid Section Service Kits (637432-XXX OR 637432-XX)

For Fluid Kits With Seats:
❶ 637432-XXX Fluid Section Service Kits include: Seats (see SEAT Option, refer to -XXX in chart below), Balls (see BALL Option, refer to -XXX in chart below), Diaphragms (see DIAPHRAGM Option, refer to -XXX in chart below), 93706-1 Key-Lube grease (see page 6), plus "O" Ring items: 2, 3, 4, 19 and 33.

For Fluid Kits Without Seats:
❶ 637432-XX Fluid Section Service Kits include: Balls (see BALL Option, refer to -XX in chart below), Diaphragms (see DIAPHRAGM Option, refer to -XX in chart below), 93706-1 Key-Lube grease (see page 6), plus "O" Ring items: 2, 3, 4, 19 and 33.

SEAT OPTIONS 6662XX-XXX-C-V

❶ "21"			
-XXX	Seat	Qty	Mtl
-1XX	95673	(4)	[A]
-2XX	94353	(4)	[SS]
-EXX	94328-A	(4)	[Sp]

BALL OPTIONS 6662XX-XXX-C-V

❶ "22" (2-1/2" diameter)			
-XXX	Ball	Qty	Mtl
-X2X	93358-2	(4)	[B]
-X4X	93358-4	(4)	[T]
-XEX	93358-A	(4)	[Sp]

MATERIAL CODE		
[A]	=	Aluminum
[B]	=	Nitrile
[C]	=	Carbon Steel
[E]	=	E.P.R
[Co]	=	Copper
[SP]	=	Santoprene
[SS]	=	Stainless Steel
[T]	=	PTFE

Note: Seat options -EXX do not require item 19 "O" ring.

DIAPHRAGM OPTIONS 6662XX-XXX-C-V

	❶ For Service Kits With Seats	❶ For Service Kits Without Seats	❶ "7"			❶ "8"			❶ "19" (1/8" x 3-5/8" OD)		
-XXX	-XXX = (Seat), -XXX = (Ball), -XXX = (Diaphragm)	-XX = (Ball) -XX = (Diaphragm)	Diaphragm	Qty	Mtl	Diaphragm	Qty	Mtl	"O" Ring	Qty	Mtl
-XX2	637432-XX2	637432-X2	97284-2	(2)	[B]	-----	---	---	Y325-237	(4)	[B]
-XX4	637432-XX4	637432-X4	96392-T	(2)	[T]	96393-A	(2)	[Sp]	Y328-237	(4)	[T]
-XXB	637432-XXB	637432-XB	96391-A	(2)	[Sp]	-----	---	---	94356	(4)	[E]

WETTED PARTS OPTIONS 6662XX-XXX-C-V

			Aluminum				Stainless Steel					
			666250-XXX-C-V		666270-XXX-C-V		666251-XXX-C-V 66625B-XXX-C-V		666271-XXX-C-V 66627B-XXX-C-V		6662F1-XXX-C-V 6662FB-XXX-C-V	
			NPTF		BSP		NPTF		BSP		ANSI / DIN Flange	
Item	Description (size)	Qty	Part No.	Mtl	Part No.	Mtl	Part No.	Mtl	Part No.	Mtl	Part No.	Mtl
❷ 6	Washer (fluid side) ★	(2)	96503	[A]	96503	[A]	94357-2	[SS]	94357-2	[SS]	94357-2	[SS]
15	Fluid Cap	(2)	47637442001	[A]	47637442001	[A]	97626	[SS]	97626	[SS]	97626	[SS]
60	Inlet Manifold	(1)	47637444002	[A]	47637444003	[A]	97630-1	[SS]	97630-2	[SS]	47586795001	[SS]
61	Outlet manifold	(1)	47637443002	[A]	47637443003	[A]	97628-1	[SS]	97628-2	[SS]	47586794001	[SS]

HARDWARE OPTIONS 6662XX-XXX-C-V

			Carbon Steel 6662X0-XXX-C-V 6662X1-XXX-C-V		Stainless Steel 6662XB-XXX-C-V	
Item	Description (size)	Qty	Part No.	Mtl	Part No.	Mtl
26	Screw (M10 x 1.5 - 6g x 34 mm)	(8)	94409-1	[C]	94409-2	[SS]
27	Screw (M10 x 1.5 - 6g x 45 mm)	(20)	94990-1	[C]	94990	[SS]
29	Nut (M10 x 1.5 - 6h)	(20)	94992-1	[C]	94992	[SS]

COMMON PARTS

Item	Description (size)	Qty	Part No.	Mtl
❷ 1	Rod	(1)	96394	[C]
❶ 2	"O" Ring (3/32" x 1" OD)	(1)	Y330-117	[B]
❷ 5	Washer (air side)	(2)	96503	[A]
9	Washer (0.630" ID)	(2)	93065	[SS]
14	Screw (5/8" - 18 x 2-1/2")	(2)	Y5-111-T	[SS]
43	Ground Lug (see page 7)	(1)	93004	[Co]

❷ "Smart Parts", keep these items on hand in addition to the service kits for fast repair and reduction of down time.

COLOR CODE		
Material	**Diaphragm Color**	**Ball Color**
Nitrile	Black	Red (•)
Santoprene	Tan	Tan
Santoprene (backup)	Green	N/A
PTFE	White (-) Stripe	White (•) Dot

* See item 8 in inset below.

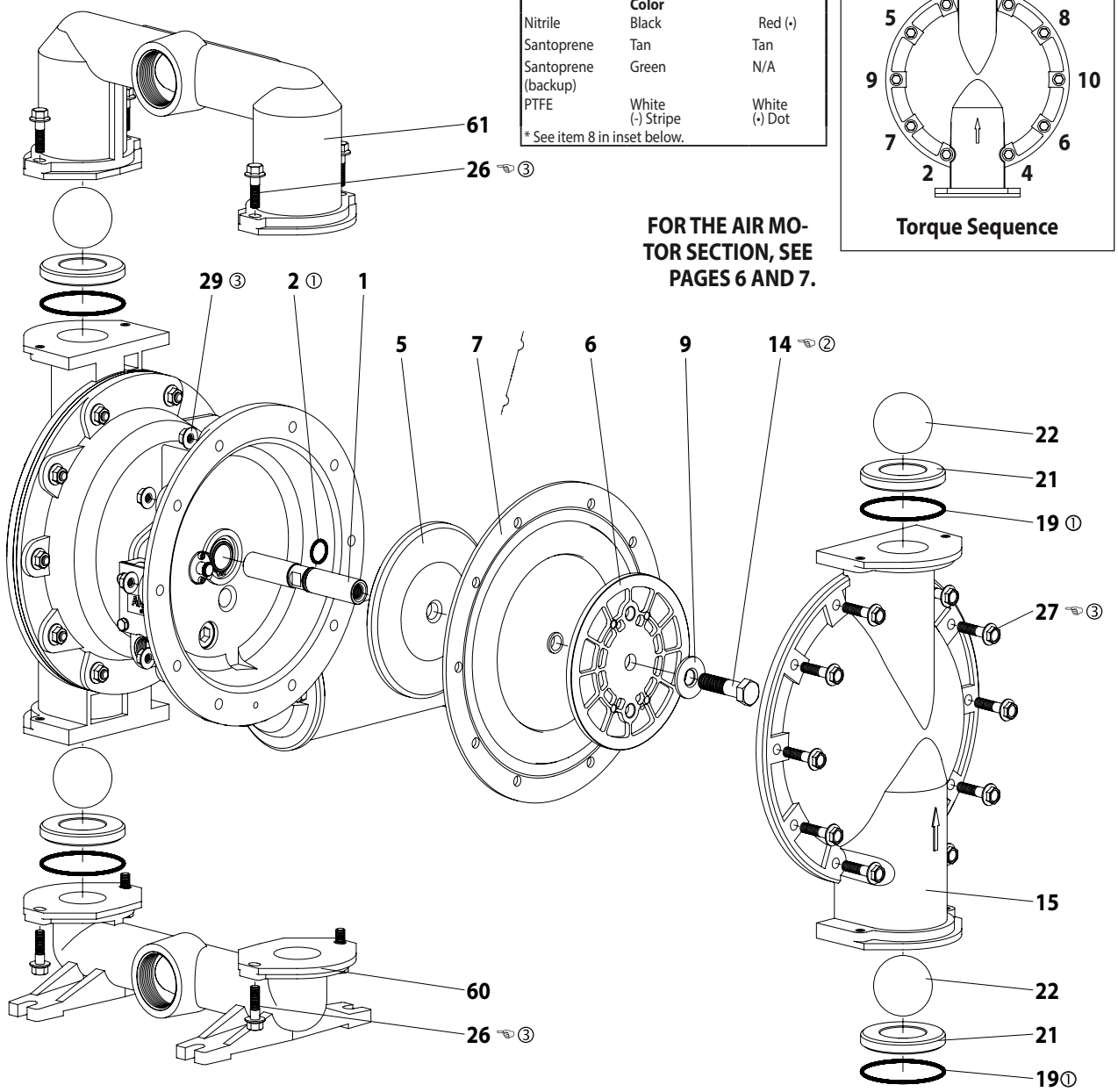

FOR THE AIR MOTOR SECTION, SEE PAGES 6 AND 7.

Figure 2

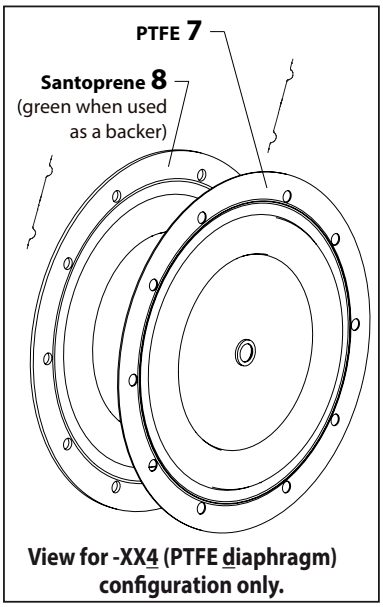

View for -XX4 (PTFE diaphragm) configuration only.

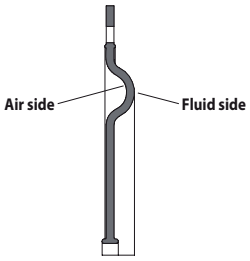

Cross section view of diaphragms

☜ ASSEMBLY TORQUE REQUIREMENTS ☜

NOTE: DO NOT OVERTIGHTEN FASTENERS.

(14) screw, 65 - 70 ft lbs (88.1 - 94.9 Nm).
(26) screw, 30 - 40 ft lbs (40.7 - 54.2 Nm).
(27) screw, 30 - 40 ft lbs (40.7 - 54.2 Nm).

LUBRICATION / SEALANTS

① **Apply Key-Lube grease to all "O" rings, "U" cups and mating parts.**
② **Apply Loctite® 271™ to threads.**
③ **Apply anti-seize compound to threads and bolt and nut flange heads which contact pump case when using stainless steel fasteners.**

PARTS LIST / 6662XX-XXX-C-V AIR MOTOR SECTION

❸ Indicates parts included in 637434 air section service kit.

AIR MOTOR PARTS

Item	Description (size)	Qty	Part No.	Mtl
101	Motor Body (models 6662X1-, 6662XB-)	(1)	47586791001	[A]
	(models 666250-, 666270-)	(1)	47637445001	[A]
❸ 102	"O" Ring (1/16" x 1-1/4" OD)	(2)	Y325-24	[B]
❷ 103	Sleeve	(1)	94528	[D]
❸ 104	Retaining Ring (1-5/32" ID)	(2)	Y145-26	[C]
105	Screw / Lockwasher (1/4" - 20 x 5/8") (models 6662X0, 6662X1)	(8)	93860	[C]
	Cap Screw (1/4" - 20 x 5/8") (models 6662XB)	(8)	Y6-42-T	[SS]
106	Lockwasher (1/4") (models 6662XB)	(8)	Y14-416-T	[SS]
107	Plate	(2)	96424	[SS]
❸ 108	Gasket (with notch)	(1)	96426	[B/Ny]
❷ 109	Piston	(1)	96422	[D]
❸ 110	"U" Cup (3/16" x 2-1/8" OD)	(1)	Y186-55	[B]
❷ 111	Spool	(1)	96421	[A]
❷ 112	Washer (2.055" OD)	(5)	93251	[Z]
❸ 113	"O" Ring (1/8" x 1-3/4" OD)	(5)	Y325-222	[B]
❸ 114	"O" Ring (3/32" x 2-1/16" OD)	(6)	Y325-134	[B]

Item	Description (size)	Qty	Part No.	Mtl
❷ 115	Spacer	(4)	93250	[Z]
❷ 116	Spacer	(1)	96420	[Z]
❸ 117	Gasket	(1)	96425	[B/Ny]
118	Pilot Rod	(1)	93309-2	[C]
❸ 119	"O" Ring (1/8" x 3/4" OD)	(4)	93075	[U]
120	Spacer	(3)	115959	[Z]
121	Sleeve Bushing	(2)	98723-2	[Bz]
❸ 122	"O" Ring (3/32" x 9/16" OD)	(2)	94820	[U]
❸ 123	Screw (#8 - 32 x 3/8")	(4)	Y154-41	[C]
126	Pipe Plug (3/4 - 14 PTF x 17/32")	(1)	Y227-6-L	[C]
127	Pipe Fitting (1-1/4 - 11-1/2 NPT x 1-1/2 - 11-1/2 NPT)	(1)	96451	[C]
128	Pipe Plug (1/8 - 27 PTF x 1/4")	(1)	Y227-2-L	[C]
195A	Button Head Screw (1/4" - 20 x 1/4")	(2)	94987	[SS]
195B	Button Head Screw (1/4" - 20 x 3/8")	(1)	94987-1	[SS]
201	Muffler Kit (includes item 127)	(1)	67389	
❶ ❸	Key-Lube "O" Ring Lubricant	(1)	93706-1	
	10 Pak of Key-Lube		637175	

MATERIAL CODE

[A] = Aluminum
[B] = Nitrile
[Bz] = Bronze
[C] = Carbon Steel
[D] = Acetal
[Ny] = Nylon
[SS] = Stainless Steel
[U] = Polyurethane
[Z] = Zinc

AIR MOTOR SECTION SERVICE

Service is divided into two parts - 1. Pilot Valve, 2. Major Valve.
GENERAL REASSEMBLY NOTES:

- Air Motor Section service is continued from Fluid Section repair.
- Inspect and replace old parts with new parts as necessary. Look for deep scratches on metallic surfaces, and nicks or cuts in "O" rings.
- Take precautions to prevent cutting "O" rings upon installation.
- Lubricate "O" rings with Key-Lube.
- Do not over-tighten fasteners. Refer to torque specification block on view.
- Re-torque fasteners following restart.

PILOT VALVE DISASSEMBLY

1. Remove (104) retaining ring.
2. Remove (123) screws and (122) "O" rings.
3. Remove (118) piston rod, (121) sleeve bushing, (119) "O" rings and (120) spacers from the (101) motor body.
4. Remove (103) sleeve and (102) "O" rings.

PILOT VALVE REASSEMBLY

1. Replace two (102) "O" rings, if worn or damaged, and reinstall (103) sleeve.
2. Install one of the (121) sleeve bushings, (119) "O" rings, (120) spacers and the remaining (121) bushing.
3. Carefully push (118) pilot rod into bushings etc. and retain on each end with the two (122) "O" rings. Retain with (123) screws.
4. Replace (104) retaining rings.

MAJOR VALVE DISASSEMBLY

1. Remove (107) plate and (108 and 117) gaskets.
2. On the side opposite the air inlet, push on the inner diameter of (111) spool. This will force the (109) piston out. Continue pushing the (111) spool and remove. Check for scratches and gouges.
3. Reach into the air section (exhaust side) and remove (116) spacer, (115) spacers, (113) "O" rings, (114) "O" rings, (112) washers. etc. Check for damaged "O" rings.

MAJOR VALVE REASSEMBLY

1. Replace (112) washer, (114) "O" ring and (113) "O" ring onto (115) spacer and insert etc. **NOTE: Be careful to orient spacer legs away from blocking internal ports.**
2. Lubricate and carefully insert (111) spool.
3. Install (117) gasket and (107) plate.
4. Lubricate and install (110) packing cup and insert (109) piston into (air inlet side) cavity. The (110) packing cup lips should point outward.
5. Install (108) gasket and replace (107).

❷ "Smart Parts", keep these items on hand in addition to the service kits for fast repair and reduction of down time.

IMPORTANT
BE CERTAIN TO ORIENT (115) SPACER LEGS AWAY FROM BLOCKING INTERNAL PORTS WHEN REASSEMBLING AIR SECTION.

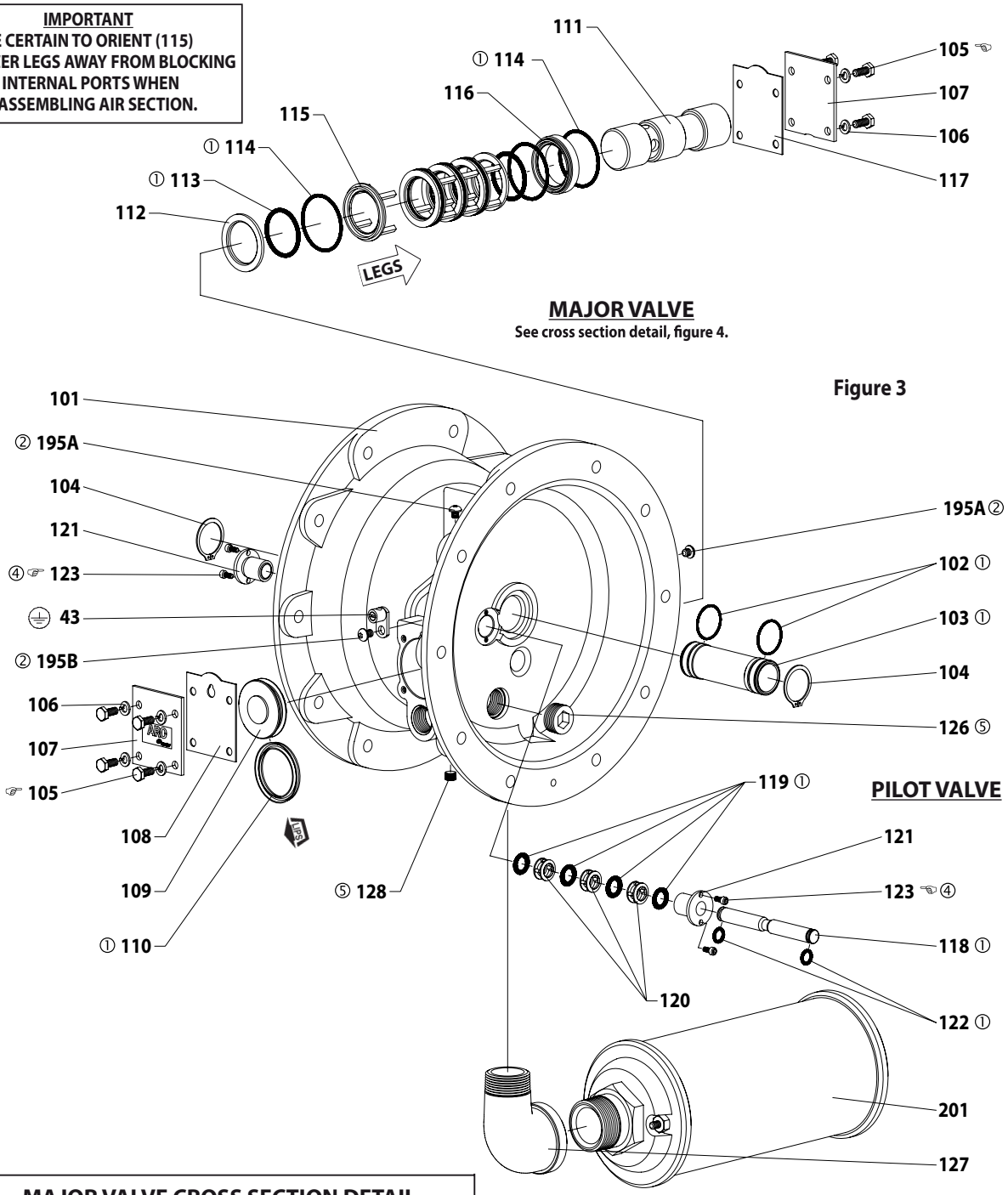

Figure 3

MAJOR VALVE CROSS SECTION DETAIL

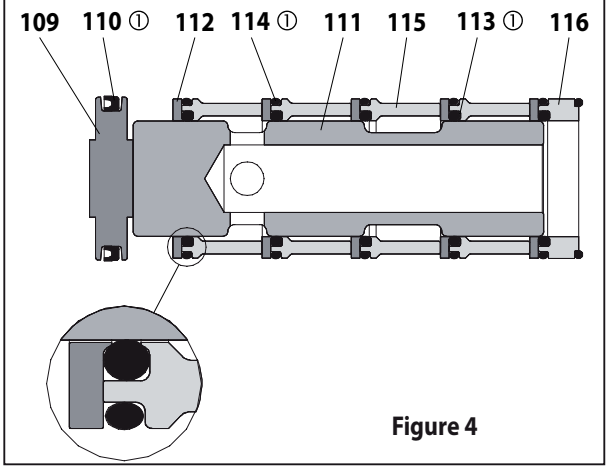

Figure 4

☞ ASSEMBLY TORQUE REQUIREMENTS ☞

NOTE: DO NOT OVERTIGHTEN FASTENERS.

(105) screw, 40 - 50 in. lbs (4.5 - 5.6 Nm).
(123) screw, 20 - 25 in. lbs (2.3 - 2.8 Nm).

LUBRICATION / SEALANTS

① Apply Key-Lube grease to all "O" rings, "U" cups and mating parts.
② Apply Loctite® 271™ to threads.
④ Apply Loctite® 262™ to threads.
⑤ Apply Loctite® 572™ to threads.

TROUBLESHOOTING

Product discharged from exhaust outlet.
- Check for diaphragm rupture.
- Check tightness of (14) diaphragm screw.

Air bubbles in product discharge.
- Check connections of suction plumbing.
- Check "O" rings between intake manifold and fluid caps.
- Check tightness of (14) diaphragm screw.

Low output volume, erratic flow or no flow.
- Check air supply.
- Check for plugged outlet hose.
- Check for kinked (restrictive) outlet material hose.
- Check for kinked (restrictive) or collapsed inlet material hose.
- Check for pump cavitation - suction pipe should be sized at least as large as the inlet thread diameter of the pump for proper flow if high viscosity fluids are being pumped. Suction hose must be a non-collapsing type, capable of pulling a high volume.
- Check all joints on the inlet manifolds and suction connections. These must be air tight.
- Inspect the pump for solid objects lodged in the diaphragm chamber or the seat area.

DIMENSIONAL DATA

Dimensions shown are for reference only, they are displayed in inches and millimeters (mm).

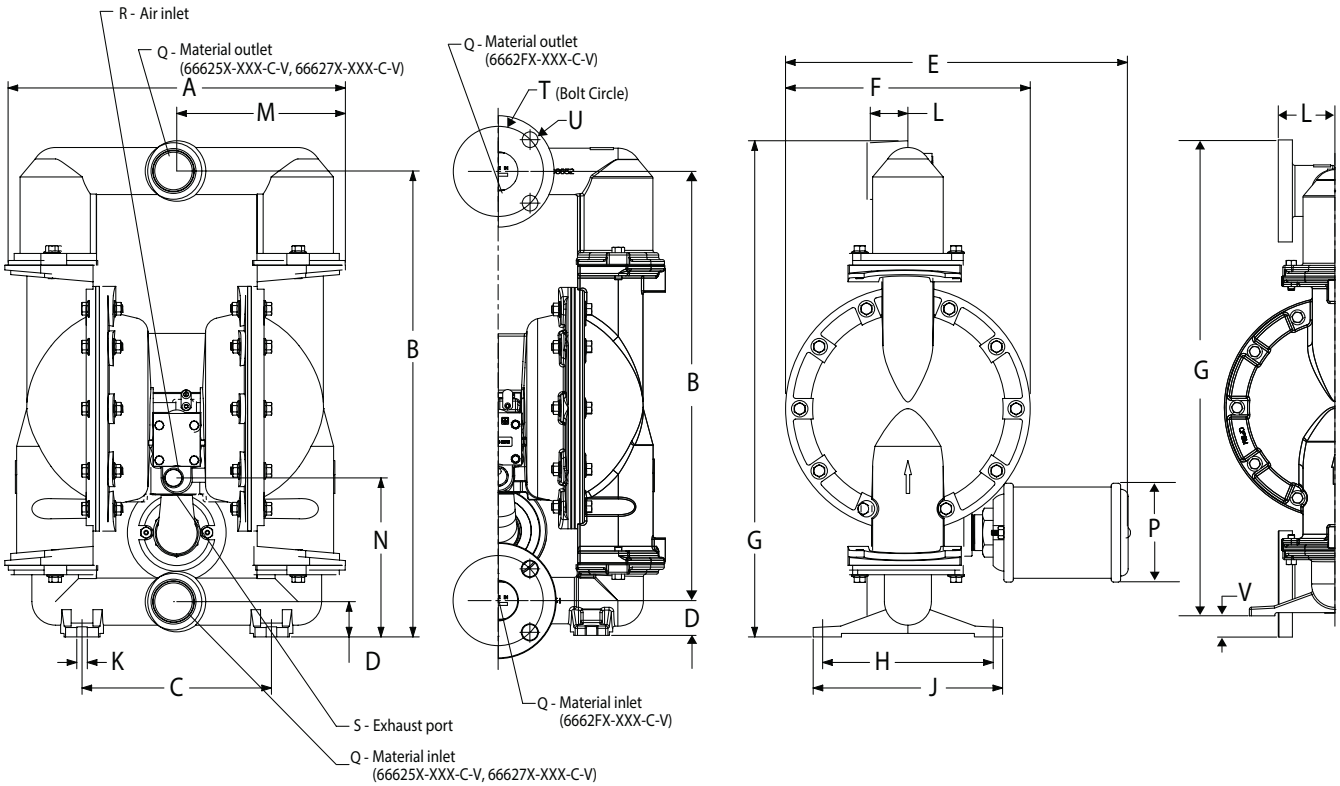

DIMENSIONS

A - see below
B - 24-3/4" (628.7 mm)
C - 10-1/16" (255.6 mm)
D - 1-7/8" (47.6 mm)
E - 22-3/4" (577.7 mm)
F - 13" (330.2 mm)
G - see below
H - 9-1/16" (230.2 mm)
J - 10-1/16" (255.6 mm)
K - 9/16" (14.3 mm)
L - see below
M - see below
N - 8-15/32" (214.6 mm)
P - 5-1/4" (133.4 mm)
Q - see below
R - 3/4 - 14 NPTF - 2
S - 1-1/4 - 11-1/2 NPTF - 2
T - Ø 4-5/6" (122.7mm)
U - Ø 5/6" (21.3mm)
V - 1-1/4" (31.8mm)

Model	"A"	"G"	"L"	"M"
(666250-XXX-C-V, 666270-XXX-C-V)	17-15/16" (455.1 mm)	26-3/8" (669 mm)	2" (50.8 mm)	8-31/32" (227.6 mm)
(666251-XXX-C-V, 66625B-XXX-C-V, 666271-XXX-C-V, 66627B-XXX-C-V)	17-29/32" (454.6 mm)	26-1/4" (666.75 mm)	1-7/8" (47.6 mm)	8-15/16" (227.3 mm)
6662FX-XXX-C-V	18" (456.7 mm)	28" (270.9 mm)	3-1/3" (84.6 mm)	9" (228.4 mm)

Model	"Q"
66625X-XXX-C-V 66627X-XXX-C-V 6662FX-XXX-C-V	2 - 11-1/2 NPTF - 2 Rp 2 (2 - 11 BSP, parallel) (2" ANSI / DIN Flange)

Figure 5