OPERATOR'S MANUAL PX15X-XXX-XXX-AXXX

INCLUDING: OPERATION, INSTALLATION AND MAINTENANCE

RELEASED: 8-7-03
REVISED: 12-6-24
(REV: AF)

1-1/2" DIAPHRAGM PUMP

1:1 RATIO (METALLIC)

READ THIS MANUAL CAREFULLY BEFORE INSTALLING, OPERATING OR SERVICING THIS EQUIPMENT.

It is the responsibility of the employer to place this information in the hands of the operator. Keep for future reference.

SERVICE KITS

637375-XXX for fluid section repair **with** seats (see page 6).
637375-XX for fluid section repair **without** Seats (see page 6).
NOTE: This kit also contains several air motor seals which will need to be replaced.
637389 for air section repair (see page 8).
637390-X major air valve assembly (see page 9).

PUMP DATA

Models..... see Model Description Chart on page 2 for "-XXX" options
Pump Type.. Metallic Air Operated Double Diaphragm
Material..... see Model Description Chart
Weight..... PX15R-XAX-XXX-AXXX 37.65 lbs (17.08 kgs)
PX15R-XCX-XXX-AXXX 73.2 lbs (33.2 kgs)
PX15R-XHX-XXX-AXXX 86.9 lbs (39.4 kgs)
PX15R-XSX-XXX-AXXX. 61.2 lbs (27.8 kgs
Maximum Air Inlet Pressure ..... 120 psig (8.3 bar)
Maximum Material Inlet Pressure... 10 psig (0.69 bar)
Maximum Outlet Pressure..... 120 psig (8.3 bar)
Maximum Flow Rate (flooded inlet) . 123 gpm (465.6 lpm)
Displacement / Cycle @ 100 psig.... 0.617 gal (2.34 ltrs)
Maximum Particle Size ..... 1/4" dia. (6.4 mm)
Maximum Temperature Limits (diaphragm / ball / seat material)
E.P.R / EPDM ..... -60° to 280° F (-51° to 138° C)
Hytrel® ..... -20° to 180° F (-29° to 82° C)
Nitrile® ..... 10° to 180° F (-12° to 82° C)
Polypropylene..... 32° to 175° F (0° to 79° C)
Santoprene®..... -40° to 225° F (-40° to 107° C)
PTFE..... 40° to 225° F (4° to 107° C)
Viton® ..... -40° to 350° F (-40° to 177° C)
Dimensional Data..... see page 10
Mounting Dimensions..... 9" x 11.75" (228.6 mm x 298.5 mm)
Noise Level @ 70 psig, 60 cpm..... 82.8 dB(A)①

① The pump sound pressure levels published here have been updated to an Equivalent Continuous Sound Level (LA_{eq}) to meet the intent of ANSI S1.13-1971, CAGI-PNEUROP S5.1. using four microphone locations.

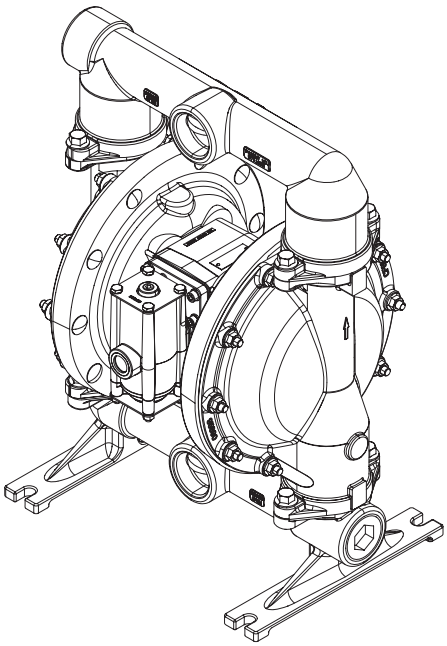

Model PD15X

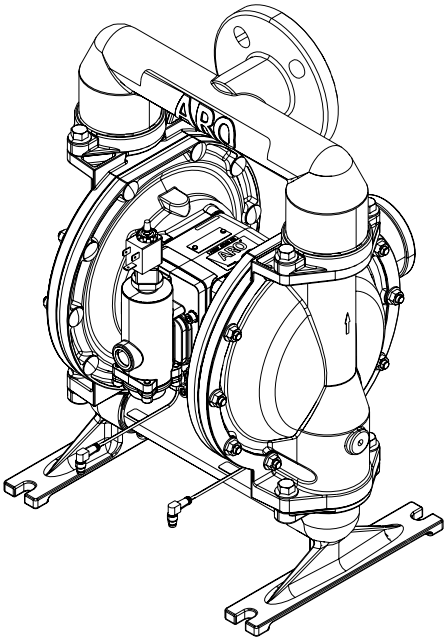

Model PE15X

Figure 1

INGERSOLL RAND COMPANY INC
209 NORTH MAIN STREET – BRYAN, OHIO 43506
✆ (800) 495-0276 • FAX (800) 892-6276
arozone.com
© 2024
CCN 15197213

ARO Ingersoll Rand

MODEL DESCRIPTION CHART

Model Code Explanation

Example: PX15 X - X X X - X X X - A X X X

Model Series

PD15- Standard Pump
PE15- Electronic Interface

Center Body Material

A - Aluminum
R - Polypropylene
S - Stainless Steel

Fluid Connection

A- 1-1/2 - 11-1/2 NPTF-1
B- Rp 1-1/2 (1-1/2 - 11 BSP, parallel)
Y- 1-1/2" A.N.S.I. / DIN Flange

Fluid Caps & Manifold Material

A- Aluminum
C- Cast Iron
H- Hastelloy - C
S- Stainless Steel

Hardware Material

P- Plated Steel
S- Stainless Steel

Seat Material

A- Santoprene®
C- Hytrel®
E- Carbon Steel
F- Aluminum
G- Nitrile
H- Hard 440 Stainless Steel
L- Hastelloy - C
S- 316 Stainless Steel

Ball Material

A- Santropene®
C- Hytrel®
G- Nitrile
S- 316 Stainless Steel
T- PTFE
V- Viton®

Diaphragm Material

A- Santoprene®
C- Hytrel®
G- Nitrile
L- Long Life PTFE
M- Medical Grade Santoprene
T- Santoprene®, PTFE
V- Viton®

Revision

A- Revision

Specialty Code 1 (Blank if no Speciality Code)

A- Solenoid 120 VAC,110 VAC AND 60 VDC
B- Solenoid 12 VDC, 24 VAC and 22 VAC
C- Solenoid 240 VAC, 220 VAC AND 120 VDC
D- Solenoid 24 VDC, 48 VAC and 44 VAC
E- Solenoid 12 VDC NEC / CEC
F- Solenoid 24 VDC NEC / CEC
G- Solenoid 12 VDC ATEX / IECEx
H- Solenoid 24 VDC ATEX / IECEx
J- Solenoid 120 VAC NEC / CEC
K- Solenoid 220 VAC ATEX / IECEx
N- Solenoid with no Coil
P- Ported Motor (No major valve)
0- Standard Valve Block (No Solenoid)
S- Cycle Sensing on Major Valve

Specialty Code 2 (Blank if no Speciality Code)

E- End of Stroke feedback + Leak Detection
F- End of Stroke feedback
G- End of Stroke ATEX / IECE / NEC / CECx
H- End of Stroke + Leak Detection ATEX / IECEx / NEC / CEC
L- Leak Detection
M- Leak Detection ATEX / IECEx / NEC / CEC
R- End of Stroke NEC
T- End of Stroke NEC / Leak Detection NEC
U- Leak Detection CCC
0- No option

Special Testing

*For Special Testing options, please contact your nearest **Ingersoll Rand** Customer Service Representative or Distributor.*

NOTICE: All possible options are shown in the chart, however, certain combinations may not be recommended. Consult a representative or the factory if you have questions concerning availability.

OPERATING AND SAFETY PRECAUTIONS

READ, UNDERSTAND, AND FOLLOW THIS INFORMATION TO AVOID INJURY AND PROPERTY DAMAGE

EXCESSIVE AIR PRESSURE
STATIC SPARK

HAZARDOUS MATERIALS
HAZARDOUS PRESSURE

⚠ WARNING EXCESSIVE AIR PRESSURE. Can cause personal injury, pump damage or property damage.

- Do not exceed the maximum inlet air pressure as stated on the pump model plate.
- Be sure material hoses and other components are able to withstand fluid pressures developed by this pump. Check all hoses for damage or wear. Be certain dispensing device is clean and in proper working condition.

⚠ WARNING STATIC SPARK. Can cause explosion resulting in severe injury or death. Ground pump and pumping system.

- Sparks can ignite flammable material and vapors.
- The pumping system and object being sprayed must be grounded when it is pumping, flushing, recirculating or spraying flammable materials such as paints, solvents, lacquers, etc. or used in a location where surrounding atmosphere is conducive to spontaneous combustion. Ground the dispensing valve or device, containers, hoses and any object to which material is being pumped.
- Secure pump, connections and all contact points to avoid vibration and generation of contact or static spark.
- Consult local building codes and electrical codes for specific grounding requirements.
- After grounding, periodically verify continuity of electrical path to ground. Test with an ohmmeter from each component (e.g. hoses, pump, clamps, container, spray gun, etc.) to ground to insure continuity:
  - For "intrinsically safe" applications: ohmmeter should show less than 1 ohm.
  - For "ordinary" applications: ohmmeter should show less than 5 ohms.
  - Pump components surface resistance: materials are generally considered conductive with resistance less than 1 X 10^6 ohms.
- Submerse the outlet hose end, dispensing valve or device in the material being dispensed if possible. (Avoid free streaming of material being dispensed.)
- Use hoses incorporating a static wire.
- Use proper ventilation.
- Keep inflammables away from heat, open flames and sparks.
- Keep containers closed when not in use.

⚠ WARNING Pump exhaust may contain contaminants. Can cause severe injury. Pipe exhaust away from work area and personnel.

- In the event of a diaphragm rupture, material can be forced out of the air exhaust muffler.
- Pipe the exhaust to a safe remote location when pumping hazardous or inflammable materials.
- Use a grounded 3/4" minimum ID hose between the pump and the muffler.

⚠ WARNING HAZARDOUS PRESSURE. Can result in serious injury or property damage. Do not service or clean pump, hoses or dispensing valve while the system is pressurized.

- Disconnect air supply line and relieve pressure from the system by opening dispensing valve or device and / or carefully and slowly loosening and removing outlet hose or piping from pump.

⚠ WARNING HAZARDOUS MATERIALS. Can cause serious injury or property damage. Do not attempt to return a pump to the factory or service center that contains hazardous material. Safe handling practices must comply with local and national laws and safety code requirements.

- Obtain Material Safety Data Sheets on all materials from the supplier for proper handling instructions.

⚠ WARNING EXPLOSION HAZARD. Models containing aluminum wetted parts cannot be usedwith III.-Trichloroethane,Methylene Chloride or other Halogenated Hydrocarbon solvents which may react and explode.

- Check pump motor section, fluid caps, manifolds and all wetted parts to assure compatibility before using with solvents of this type.

⚠ WARNING MISAPPLICATION HAZARD. Do not use models containing aluminum wetted parts with food products for human consumption. Plated parts can contain trace amounts of lead.

⚠ CAUTION Verify the chemical compatibility of the pump wetted parts and the substance being pumped, flushed or recirculated. Chemical compatibility may change with temperature and concentration of the chemical(s) within the substances being pumped, flushed or circulated. For specific fluid compatibility, consult the chemical manufacturer.

⚠ CAUTION Maximum temperatures are based on mechanical stress only. Certain chemicals will significantly reduce maximum safe operating temperature. Consult the chemical manufacturer for chemical compatibility and temperature limits. Refer to PUMP DATA on page 1 of this manual.

⚠ CAUTION Be certain all operators of this equipment have been trained for safe working practices, understand it's limitations, and wear safety goggles / equipment when required.

⚠ CAUTION Do not use the pump for the structural support of the piping system. Be certain the system components are properly supported to prevent stress on the pump parts.

- Suction and discharge connections should be flexible connections (such as hose), not rigid piped, and should be compatible with the substance being pumped.

⚠ CAUTION Prevent unnecessary damage to the pump. Do not allow pump to operate when out of material for long periods of time.

- Disconnect air line from pump when system sits idle for long periods of time.

⚠ CAUTION Use only genuine ARO® replacement parts to assure compatible pressure rating and longest service life.

NOTICE TORQUE ALL FASTENERS BEFORE OPERATION. Creep of housing and gasket materials may cause fasteners to loosen. Re -Torque all fasteners to ensure against fluid or air leakage.

⚠ WARNING	=	**Hazards or unsafe practices which could result in severe personal injury, death or substantial property damage.**
⚠ CAUTION	=	**Hazards or unsafe practices which could result in minor personal injury, product or property damage.**
NOTICE	=	**Important installation, operation or maintenance information.**

GENERAL DESCRIPTION

The ARO diaphragm pump offers high volume delivery even at low air pressure and a broad range of material compatibility options available. Refer to the model and option chart. ARO pumps feature stall resistant design, modular air motor / fluid sections.

Air operated double diaphragm pumps utilize a pressure differential in the air chambers to alternately create suction and positive fluid pressure in the fluid chambers, ball checks ensure a positive flow of fluid.

Pump cycling will begin as air pressure is applied and it will continue to pump and keep up with the demand. It will build and maintain line pressure and will stop cycling once maximum line pressure is reached (dispensing device closed) and will resume pumping as needed.

AIR AND LUBE REQUIREMENTS

⚠ WARNING **EXCESSIVE AIR PRESSURE. Can cause pump damage, personal injury or property damage.**

- A filter capable of filtering out particles larger than 50 microns should be used on the air supply. There is no lubrication required other than the "O" ring lubricant which is applied during assembly or repair.
- If lubricated air is present, make sure that it is compatible-with the "O" rings and seals in the air motor section of the pump.

INSTALLATION

- Verify correct model / configuration prior to installation.
- Retorque all external fasteners per specifications prior to start up.
- Pumps are tested inwater at assembly. Flush pump with compatible fluid prior to installation.
- When the diaphragm pump is used in a forced-feed (flooded inlet) situation, it is recommended that a "Check Valve" be installed at the air inlet.
- Material supply tubing should be at least the same diameter as the pump inlet manifold connection.
- Material supply hose must be reinforced, non-collapsible type compatible with the material being pumped.
- Piping must be adequately supported. Do not use the pump to support the piping.
- Use flexible connections (such as hose) at the suction and discharge. These connections should not be rigid piped and must be compatible with the material being pumped.
- Secure the diaphragm pump legs to a suitable surface (level and flat) to ensure against damage by vibration.
- Pumps that need to be submersed must have both wet and non-wet components compatible with the material being pumped.
- Submersed pumps must have exhaust pipe above liquid level. Exhaust hose must be conductive and grounded.
- Flooded suction inlet pressure must not exceed 10 psig (0.69 bar).

OPERATING INSTRUCTIONS

- Always flush the pump with a solvent compatible with the material being pumped if the material being pumped is subject to "setting up" when not in use for a period of time.
- Disconnect the air supply from the pump if it is to be inactive for a few hours.

PARTS AND SERVICE KITS

Refer to the part views and descriptions as provided on page 5 through 8 for parts identification and Service Kit information.

- Certain ARO "Smart Parts" are indicated which should be available for fast repair and reduction of down time.
- Service kits are divided to service two separate diaphragm pump functions: 1. AIR SECTION, 2. FLUID SECTION. The FLUID SECTION is divided further to match typical part MATERIAL OPTIONS.

MAINTENANCE

- Provide a clean work surface to protect sensitive internal moving parts from contamination from dirt and foreign-matter during service disassembly and reassembly.
- Keep good records of service activity and include pump in preventive maintenance program.
- Before disassembling, empty captured material in the outlet manifold by turning the pump upside down to drain material from the pump.

FLUID SECTION DISASSEMBLY

1. Remove (61) outlet manifold and (60) inlet manifold.
2. Remove (22) balls, (19) "O" rings and (21) seats.
3. Remove (15) fluid caps.

NOTE: Only PTFE diaphragm models use a primary diaphragm (7) and a backup diaphragm (8).

4. Remove the (14) screw, (6) diaphragm washer, (7) or (7 / 8) diaphragms and (5) backup washer.

NOTE: Do not scratch or mar the surface of (1) diaphragm rod.

FLUID SECTION REASSEMBLY

- Reassemble in reverse order. Refer to the torque requirements on page 7.
- Clean and inspect all parts. Replace worn or damaged parts with new parts as required.
- Lubricate (1) diaphragm rod and (144) "U" cup with Lubriplate® FML-2 grease (94276 grease packet is included in service kit).
- Formodelswith PTFE diaphragms: Item(8) Santoprene diaphragm is installed with the side marked "AIR SIDE" towards the pump center body. Install the PTFE diaphragm (7) with the side marked "FLUID SIDE" towards the (15) fluid cap.
- Check torque settings after pump has been re-started and run a while.

• Viton® is a registered trademarks of the Chemours Company • Hytrel® is a registered trademark of the DuPont Company •
• Loctite®, 242 and 271™ are registered trademarks of the Henkel Loctite Corporation • ARO® is a registered trademark of Ingersoll-Rand Company •
• Santoprene® is a registered trademark of Celanese • Lubriplate® is a registered trademark of Lubriplate Division (Fiske Brothers Refining Company) •

PARTS LIST / PX15X-XXX-XXX-AXXX FLUID SECTION

Fluid Section Service Kits (637375-XXX OR 637375-XX)

For Fluid Kits With Seats:

❶ 637375-XXX Fluid section service kit includes: Seats (see SEAT Option, refer to -XXX in chart below), Balls (see BALL Option, refer to -XXX in chart below), Diaphragms (see DIAPHRAGM Option, refer to -XXX in chart) and item 19, 70, 144, 175 and 180 (listed below) plus items 174 and 94276 Lubriplate® FML-2 grease (page 8).

For Fluid Kits Without Seats:

❶ 637375-XX Fluid section service kit includes: Balls (see BALL Option, refer to -XX in chart below), Diaphragms (see Diaphragm Option, refer to -XX in chart below) and item 19, 70, 144, 175 and 180 (listed below) plus items 174 and 94276 Lubriplate® FML-2 grease (page 8).

COMMON PARTS PX15X-XXX-XXX-AXXX

Item	Description	[Mtl]	Qty	Part no
1	Connecting Rod	[C]	(1)	97147
❶❷70	Gasket	[B]	(2)	95843
76	Pipe Plug (1/8 - 27 NPT x 0.27") (only on PE15X-XXX-XXX-ASXX)	[SS]	(1)	Y17-50-S
❶❷144	"U" Cup (3/16" x 1-1/4" OD)	[B]	(2)	Y186-50
❶❷175	"O" Ring (3/32" x 13/16" OD)	[B]	(2)	Y325-114

MATERIAL CODE

[A] = Aluminum
[B] = Nitrile
[C] = Carbon Steel
[CI] = Cast Iron
[Co] = Copper
[E] = E.P.R.
[H] = Hytrel
[Ha] = Hastelloy-C
[K] = PVDF
[L] = Long Life PTFE
[MSP] =MedicalGrade Santoprene
[P] = Polypropylene
[SH] = Hard Stainless Steel
[SP] = Santoprene
[SS] = Stainless Steel
[T] = PTFE
[V] = Viton

EXTERNAL HARDWARE OPTIONS PX15X-XXX-XXX-AXXX

			PX15X-XXP		PX15S-XXS		PX15R-XXS	
Item	Description	Qty	Part no	[Mtl]	Part no	[Mtl]	Part no	[Mtl]
26	Screw (M10 x 1.5 - 6g x 30 mm)	(8)	95884-1	[C]	95884	[SS]	95884	[SS]
27	Bolt (M8 x 1.25 - 6g x 40 mm)	(20)	95896-1	[C]	95896	[SS]	----	---
	(M8 x 1.25 - 6g x 50 mm)	(20)	----	---	----	--	96163	[SS]
29	Hex Flange Nut (M8 x 1.25 - 6h)	(20)	95879-1	[C]	95879	[SS]	95879	[SS]

MANIFOLD / FLUID CAP MATERIAL PX15X-XXX-XXX-AXXX

			PX15X-XAX		PX15X-XCX		PX15X-YHX		PX15X-XSX		PX15X-YSX	
Item	Description	Qty	Part no	[Mtl]	Part no	[Mtl]	Part no	[Mtl]	Part no	[Mtl]	Part no	[Mtl]
5	Backup Washer	(2)	95819-3	[C]	95819-3	[C]	95819-1	[SS]	95819-1	[SS]	95819-1	[SS]
6	Diaphragm Washer	(2)	95819-3	[C]	95819-3	[C]	95819-2	[Ha]	95819-1	[SS]	95819-1	[SS]
9	Washer	(2)	Y13-8-T	[SS]	Y13-8-T	[SS]	95993	[Ha]	Y13-8-T	[SS]	Y13-8-T	[SS]
14	Screw (M14 x 2 - 6g x 45 mm)	(2)	95883	[SS]	95883	[SS]	95952	[Ha]	95883	[SS]	95883	[SS]
15	Fluid Cap	(2)	95821	[A]	95953	[CI]	95949	[Ha]	95890	[SS]	95890	[SS]
60	Inlet Manifold	(1)	95828-[♦]	[A]	95940-[♦]	[CI]	95954-❖	[Ha]	95900-[♦]	[SS]	95943-❖	[SS]
61	Outlet Manifold	(1)	95827-[♦]	[A]	95937-[♦]	[CI]	95956-❖	[Ha]	95899-[♦]	[SS]	95945-❖	[SS]
63	Pipe Plug (1-1/2 NPT)	(2)	Y17-127	[A]	Y17-57-S	[SS]	----		Y17-57-S	[SS]	----	---
	(R 1-1/2)	(2)	95902-2	[A]	95902-1	[SS]	----		95902-1	[SS]	----	---

SEAT OPTIONS PX15X-XXX-XXX-AXXX

"21"

-XXX	Seat	Qty	[Mtl]	-XXX	Seat	Qty	[Mtl]
-AXX	95825-A	(4)	[SP]	-GXX	95825-G	(4)	[B]
-CXX	95825-C	(4)	[H]	-HXX	95891	(4)	[SH]
-EXX	95893	(4)	[C]	-LXX	95947	(4)	[Ha]
-FXX	95892	(4)	[A]	-SXX	95877	(4)	[SS]

BALL OPTIONS PX15X-XXX-XXX-AXXX

❶ "22" (2" diameter)

-XXX	Ball	Qty	[Mtl]	-XXX	Ball	Qty	[Mtl]
-XAX	95826-A	(4)	[SP]	-XTX	95826-4	(4)	[T]
-XCX	95826-C	(4)	[H]	-XVX	95826-3	(4)	[V]
-XGX	95826-2	(4)	[B]				
-XSX	95878	(4)	[SS]				

♦ For NPTF thread models (PX15X-AXX-XXX), use "-1"
♦ For BSP thread models (PX15X-BXX-XXX), use "-2"
❖ Flange models
❷ Items included in air section service kit, see page 8.

PARTS LIST / PX15X-XXX-XXX-AXXX FLUID SECTION

DIAPHRAGM OPTIONS PX15X-XXX-XXX-AXXX

	❶ Service Kit With Seat	❶ Service Kit Without Seat	❶ "7"			❶ "8"			❶ "19" (3/16" x 3-1/4" OD)		
-XXX	-XXX = (Seat) -XXX = (Ball) -XXX= (Diaphragm)	-XX = (Ball) -XX = (Diaphragm)	Diaphragm	Qty	[Mtl]	Diaphragm	Qty	[Mtl]	"O" Ring	Qty	[Mtl]
-XXA	637375-XXA	637375-XA	96166-A	(2)	[SP]	----	---	--	95992	(4)	[E]
-XXC	637375-XXC	637375-XC	96166-C	(2)	[H]	----	---	--	Y327-233	(4)	[V]
-XXG	637375-XXG	637375-XG	96329-2	(2)	[B]	----	---	--	Y325-233	(4)	[B]
-XXL	637375-XXL	637375-XL	96165-L	(2)	[L]	96164-A	(2)	[SP]	Y328-233	(4)	[T]
-XXM	637375-XXM	637375-XM	96166-M	(2)	[MSP]	----	---	--	Y328-233	(4)	[T]
-XXT	637375-XXT	637375-XT	96165-T	(2)	[T]	96164-A	(2)	[SP]	Y328-233	(4)	[T]
-XXV	637375-XXV	637375-XV	95820-3	(2)	[V]	----	---	--	Y327-233	(4)	[V]

CENTER SECTION OPTIONS PX15X-XXX-XXX-AXXX

			PX15A-X		PX15R-X		PX15S-X	
Item	Description	Qty	Part no	[Mtl]	Part no	[Mtl]	Part no	[Mtl]
28	Washer (0.406" ID x 1" OD x 0.093")	(4)	-----	--	93360-1	[SS]	-----	--
43	Ground Lug	(1)	93004	[Co]	-----	--	93004	[Co]
68	Air Cap	(1)	95822-3	[A]	95971-3	[P]	95889-3	[SS]
69	Air Cap	(1)	95822-4	[A]	95971-4	[P]	95889-4	[SS]
74	Pipe Plug (1/4 - 18 NPT x 7/16")	(2)	Y17-51-S	[SS]	93832-3	[K]	Y17-51-S	[SS]
131	Screw (M10 x 1.5 - 6g x 100 mm)	(4)	95934	[C]	-----	--	96657	[SS]
	(M10 x 1.5 - 6g x 110 mm)	(4)	-----	--	96056	[SS]	-----	--
❶	Washer (1-1/2 NPT)	(4)	94098	[Co]	-----	--	94098	[Co]
❷180	"O" Ring (3 mm x 15 mm OD)	(8)	-----	--	96291	[B]	-----	--
195	Nut (M10 x 1.5 - 6h)	(4)	93010	[SS]	94992	[SS]	93010	[SS]

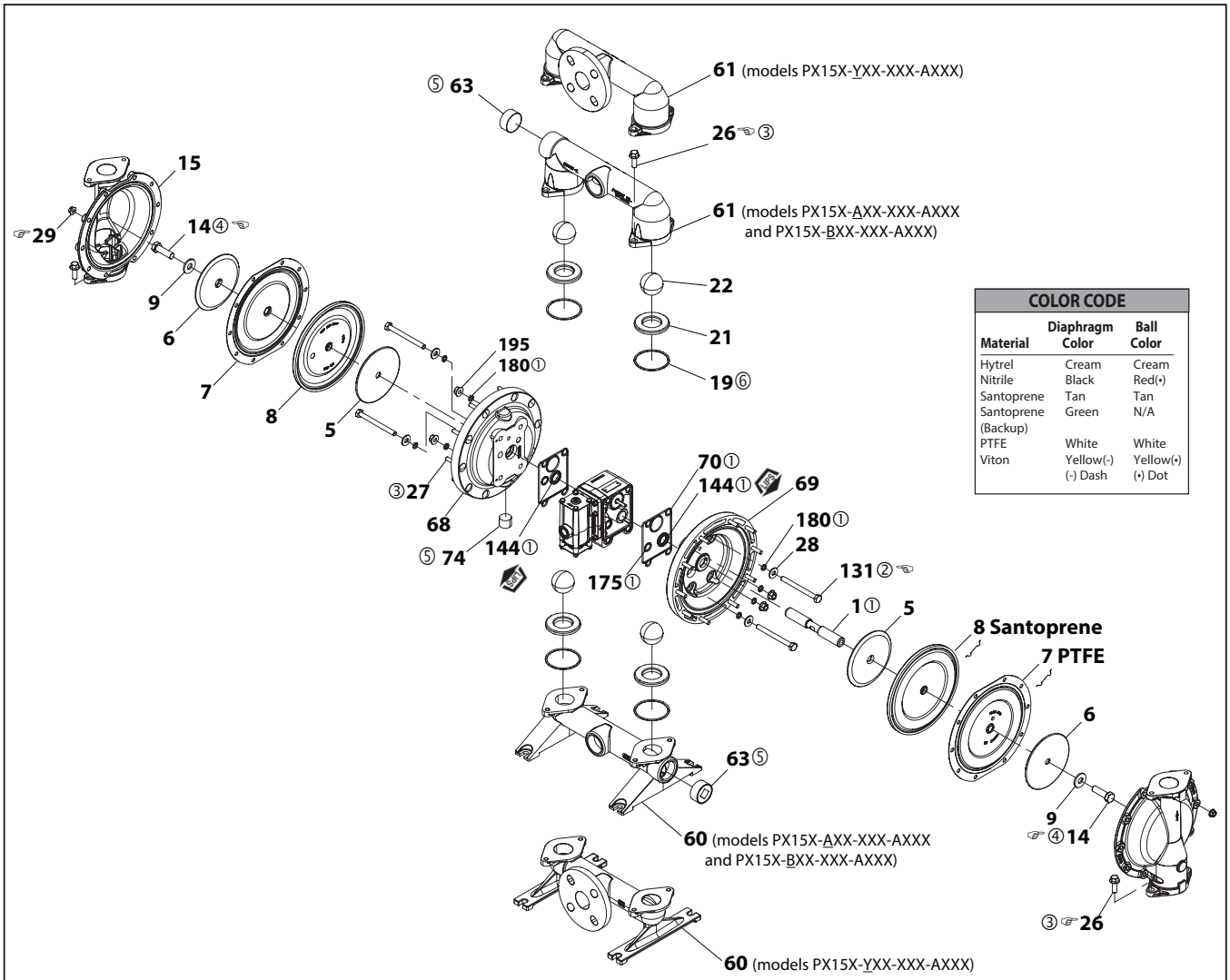

COLOR CODE

Material	Diaphragm Color	Ball Color
Hytrel	Cream	Cream
Nitrile	Black	Red(•)
Santoprene	Tan	Tan
Santoprene (Backup)	Green	N/A
PTFE	White	White
Viton	Yellow(-) (-) Dash	Yellow(•) (•) Dot

☞ASSEMBLY TORQUE REQUIREMENTS☜

NOTE: DO NOT OVERTIGHTEN FASTENERS.

(14) Screw, tighten to 50 - 55 ft lbs (67.8 - 74.6 Nm).
(26) Screws, 20 - 25 ft lbs (27.1 - 33.9 Nm).
(29) Nuts, 15 - 20 ft lbs (20.3 - 27.1 Nm).
(131) Screws, 12 - 17 ft lbs (16.3 - 23.0 Nm).

LUBRICATION / SEALANTS

① **Apply Lubriplate FML-2 grease to all "O" rings, "U" Cups & mating parts.**
② **Apply Loctite® 242 to threads at assembly.**
③ **Apply anti-seize compound to threads and bolt and nut flange heads which contact pump case when using stainless steel fasteners.**
④ **Apply Loctite® 271 to threads at assembly.**
⑤ **Apply PTFE tape to threads at assembly.**
⑥ **Not used with PX15X-XXX-AXX, -CXX and -GXX.**

Note: Lubriplate FML-2 is a white food grade petroleum grease.

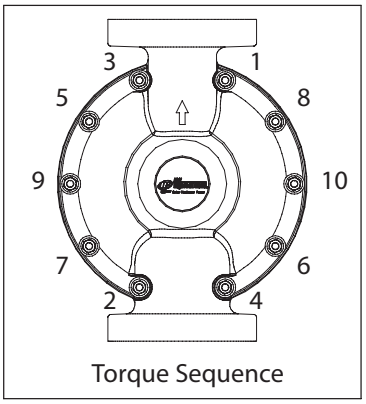

Torque Sequence

Figure 2

PARTS LIST / PX15X-XXX-XXX-AXXX AIR SECTION PARTS

❸ Indicates parts included in 637389 air section service kit.

Item	Description	Part no	Qty	[Mtl]
101	**Center Body** (PX15A-X)	97025	(1)	[A]
	(PX15R-X)	97026		[P]
	(PX15S-X)	97034		[SS]
103	**Bushing**	97392	(1)	[D]
105	**Screw** (M6 x 1 - 6g)			
	(PX15A-X and PX15S-X) (16 mm long)	95991	(4)	[SS]
	(PX15R-X) (130 mm long)	95886	(4)	[SS]
107	**End Plate** (PX15R-X only)	95840	(2)	[SS]
111	**Spool** (PX15A-X and PX15S-X)	95835	(1)	[D]
	(PX15R-X)	96293	(1)	[D]
118	**Actuator Pin**	95839	(2)	[SS]
121	**Sleeve**	95123	(2)	[D]
126	**Plug** (PX15A-X)	Y17-13-S	(1)	[A]
	(PX15R-X)	93897-1		[P]
	(PX15S-X)	Y17-13-S		[SS]
128	**Pipe Plug** (1/8 - 27 NPT x 0.27") (PX15A-X and PX15S-X only)	Y17-50-S	(1)	[SS]
❸132	**Gasket**	96170	(1)	[B]
133	**Washer** (1/4") (PX15A-X)	Y117-416-C	(3)	[C]
	(M6) (PX15R-X)	95931	(6)	[SS]
	(1/4") (PX15S-X)	Y14-416-T	(3)	[SS]
134	**Screw** (M6 x 1 - 6g x 20 mm) (PX15R-X)	95887	(6)	[SS]
	(PX15A-X and PX15S-X)	95887	(4)	[SS]
135	**Valve Block** (PX15A-XXX-XXX-AXXX)	95942-1	(1)	[Z]
	(PX15R-XXX-XXX-AXXX)	95834-1	(1)	[P]
	(PX15S-XXX-XXX-AXXX)	95939-1	(1)	[SS]

Item	Description	Part no	Qty	[Mtl]
136	**End Cap** (PX15A-X)	95941	(1)	[Z]
	(PX15R-X)	95833	(1)	[P]
	(PX15S-X)	95938	(1)	[SS]
❸137	**Gasket**	95844	(1)	[B]
❸138	**"U" Cup** (3/16" x 1-5/8" OD)	Y186-53	(1)	[B]
❸139	**"U" Cup** (3/16" x 1-1/8" OD)	Y186-49	(1)	[B]
140	**Valve Insert**	95838	(1)	[AO]
141	**Valve Plate**	95837	(1)	[AO]
❸166	**Gasket**	96171	(1)	[B]
❸167	**Pilot Piston** (includes 168 and 169)	67164	(1)	[D]
168	**"O" Ring** (3/32" x 5/8" OD)	94433	(2)	[U]
169	**"U" Cup** (1/8" x 7/8" OD)	Y240-9	(1)	[B]
170	**Piston Sleeve**	94081	(1)	[D]
❸171	**"O" Ring** (3/32" x 1-1/8" OD)	Y325-119	(1)	[B]
❸172	**"O" Ring** (1/16" x 1-1/8" OD)	Y325-22	(1)	[B]
❸173	**"O" Ring** (3/32" x 1-3/8" OD)	Y325-123	(2)	[B]
❸ ❹174	**"O" Ring** (1/8" x 1/2" OD)	Y325-202	(2)	[B]
176	**Diaphragm** (check valve)	95845	(2)	[U]
181	**Roll pin** (5/32" OD x 1/2" long)	Y178-52-S	(4)	[SS]
❸200	**Gasket** (PX15A-X and PX15S-X)	96172	(1)	[B]
	(PX15R-X)	95842	(1)	[B]
201	**Muffler** (PX15R-X)	93139	(1)	[P]
	(PX15A-X and PX15S-X)	350-568	(1)	---
❹233	**Adapter Plate**	95832	(1)	[P]
236	**Nut** (M6 x 1 - 6h) (PX15R-X)	95924	(4)	[SS]
❹❸	**Lubriplate FML-2 grease**	94276	(1)	
	Lubriplate Grease Packets (10)	637308		

❹ **Fluid Section Service Kit parts, See page 6**

AIR MOTOR SECTION SERVICE

Service is divided into two parts - 1. Pilot Valve, 2. Major Valve. GENERAL REASSEMBLY NOTES:

- Air Motor Section Service is continued from Fluid Section repair.
- Inspect and replace old parts with new parts as necessary. Look for deep scratches on surfaces, and nicks or cuts in "O" rings.
- Take precautions to prevent cutting "O" rings upon installation.
- Lubricate "O" rings with Lubriplate FML-2 grease.
- Do not over-tighten fasteners, refer to torque specification block on view.
- Torque fasteners following restart.
- SERVICE TOOLS - To aid in the installation of (168) "O" rings onto the (167) pilot piston, use tool # 204130-T, available from ARO.

PILOT VALVE DISASSEMBLY

1. A light tapping on (118) should expose the opposite (121) sleeve, (167) pilot piston and other parts.
2. Remove (170) sleeve, inspect inner bore of sleeve for damage.

PILOT VALVE REASSEMBLY

1. Clean and lubricate parts not being replaced from service kit.
2. Install new (171 and 172) "O" rings, replace (170) sleeve.
3. Install new (168) "O" rings and (169) seal - **NOTE:** The lip direction. Lubricate and replace (167).
4. Reassemble remaining parts, replace (173 and 174) "O" rings.

MAJOR VALVE DISASSEMBLY

1. Remove (135) valve block and (233) adapter plate, exposing (132 and 166) gaskets and (176) check valve.
2. Insert asmall flat blade screwdriver into the notch in the side of (135) valve block and push in on tab to remove (233) adapter plate, releasing (140) valve insert, (141) valve plate and (200) gasket.
3. Remove (136) end cap and (137) gasket, releasing (111) spool.

MAJOR VALVE REASSEMBLY

1. Install new (138 and 139) "U" cups on (111) spool - **LIPS MUST FACE EACH OTHER.**
2. Insert (111) spool into (135) valve block.
3. Install (137) gasket on (136) end cap and assemble end cap to (135) valve block, securing with (107) end plates and (105) screws.
4. Install (140) valve insert and (141) valve plate into (135) valve block. **NOTE:** Assemble (140) valve insert with "dished" side toward (141) valve plate. Assemble (141) valve plate with part number identification toward (140) valve insert.

5. Assemble (200) gasket and (233) adapter plate to (135) valve block. **NOTE:** Assemble (233) adapter plate with notched side down.
6. Assemble (132 and 166) gaskets and (176) check valve to (101) body.
7. Assemble (135) valve block and components to (101) body, securing with (134) screws.

MATERIAL CODE					
[A]		Aluminum	[GP]	=	Groundable Polypropylene
[AO]	=	Alumina Oxide	[P]	=	Polypropylene
[B]	=	Nitrile	[SP]	=	Santoprene
[Br]	=	Brass	[SS]	=	Stainless Steel
[C]	=	Carbon Steel	[U]	=	Polyurethane
[D]	=	Acetal	[Z]	=	Zinc

PARTS LIST PX15X-XXX-XXX-AXXX / AIR SECTION

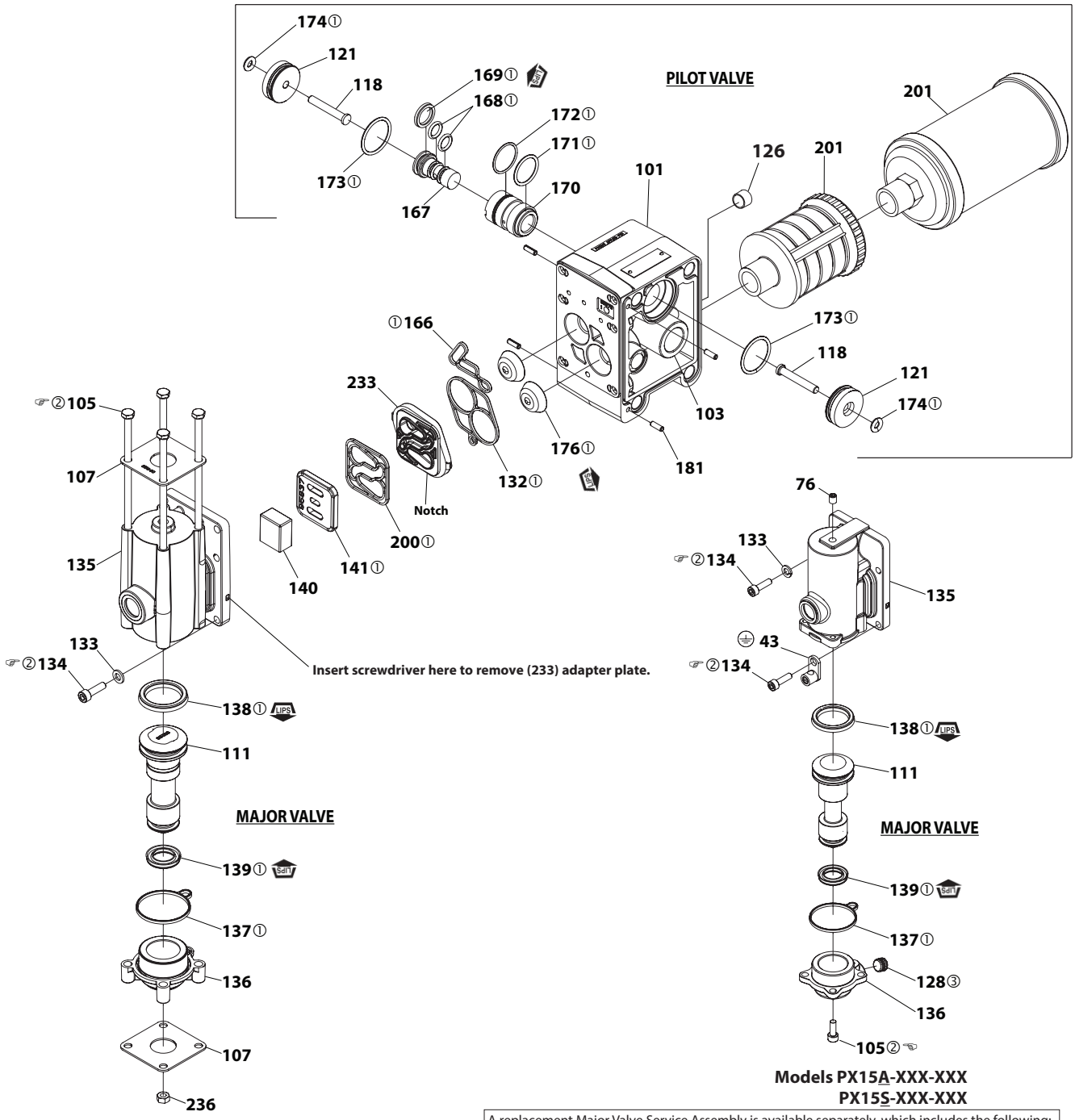

A replacement Major Valve Service Assembly is available separately, which includes the following:
637390-1 for models PD15R-XXX-XXX: 105 (4), 107 (2), 111, 132, 135, 136, 137, 138, 139, 140, 141, 166, 176 (2), 200, 233 and 236 (4).
637390-2 for models PE15R-XXX-XXX:76,105(4),107(2),111,132,135,136,137,138,139,140, 141, 166, 176 (2), 200, 233 and 236 (4).
637390-3 for models PD15A-XXX-XXX: 105 (4), 111, 128, 132, 135, 136, 137, 138, 139, 140, 141, 166, 176 (2), 200 and 233.
637390-4 for models PE15A-XXX-XXX: 76, 105 (4), 111, 128, 132, 135, 136, 137, 138, 139, 140, 141, 166, 176 (2), 200 and 233.
637390-5 for models PD15S-XXX-XXX: 105 (4), 111, 128, 132, 135, 136, 137, 138, 139, 140, 141, 166, 176 (2), 200 and 233.
637390-6 for models PE15S-XXX-XXX: 76, 105 (4), 111, 128, 132, 135, 136, 137, 138, 139, 140, 141, 166, 176 (2), 200 and 233.

☞ASSEMBLY TORQUE REQUIREMENTS☜

NOTE: DO NOT OVERTIGHTEN FASTENERS.

PX15A-XXX-XXX and PX15S-XXX-XXX: Torque (105 and 134) screws to 40 -50 in. lbs (4.5 - 5.6 Nm).
PX15R-XXX-XXX: Torque (134) screw to 35 - 40 in. lbs (4.0 - 4.5 Nm) and (236) nut to 35 - 40 in. lbs (4.0 - 4.5 Nm).

LUBRICATION / SEALANTS

① Apply Lubriplate FML-2 grease to "O" rings, "U" Cups & mating parts.
② Apply anti-seize compound to threads at assembly.
③ Apply PTFE tape to threads at assembly.

Figure 3

TROUBLESHOOTING

Product discharged from air exhaust.
- Check for diaphragm rupture.
- Check tightness of (14) diaphragm screw.

Air bubbles in product discharge.
- Check connections of suction plumbing.
- Check "O" rings between intake manifold and inlet side fluid caps.
- Check tightness of (14) diaphragm screw.

Motor blows air or stalls.
- Check (176) check valve for damage or wear.
- Check for restrictions in valve / exhaust.

Low output volume.
- Check air supply.
- Check for plugged outlet hose.
- Check for kinked (restrictive) outlet material hose.
- Check for kinked (restrictive) or collapsed inlet material hose.
- Check for pump cavitation - suction pipe should be sized at least as large as the inlet thread diameter of the pump for proper flow if high viscosity fluids are being pumped. Suction hose must be a non-collapsing type, capable of pulling a high vacuum.
- Check all joints on the inlet manifolds and suction connections. These must be air tight.
- Inspect the pump for solid objects lodged in the diaphragm chamber or the seat area.

DIMENSIONAL DATA

Dimensions shown are for reference only, they are displayed in inches and millimeters (mm).

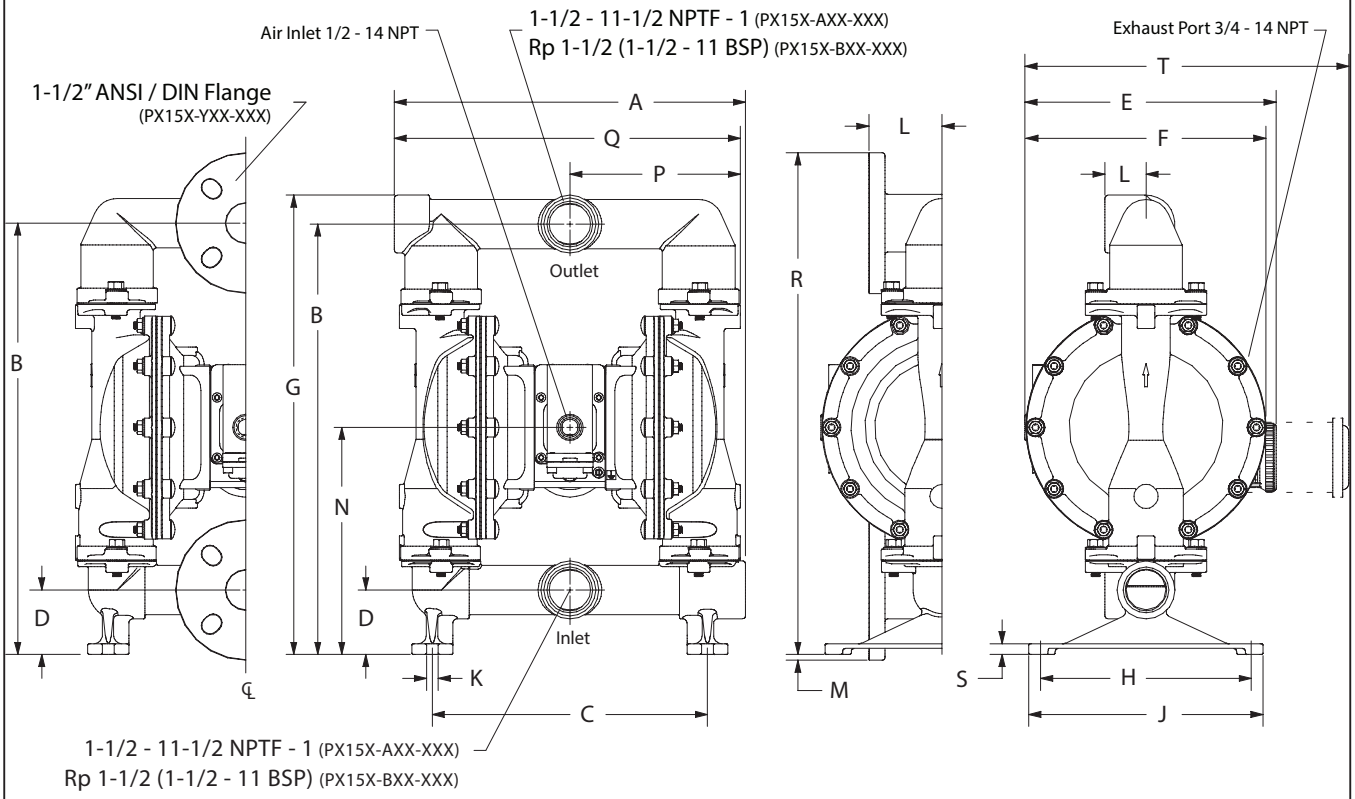

DIMENSIONS

A - see below	F - 10-1/4" (260.4 mm)	L - see below	R - 21-7/16" (543.9 mm)
B - 18-3/8" (466.7 mm)	G - 19-5/8" (498.1 mm)	M - 1/4" (6.4 mm)	S - see below
C - 11-3/4" (298.5 mm)	H - 9" (228.6 mm)	N - 9-11/16" (246.0 mm)	T - see below
D - 2-3/4" (69.9 mm)	J - 10" (254.0 mm)	P - see below	
E - see below	K - 1/2" (12.7 mm)	Q - see below	

	"A"	"L"	"P"	"Q"	"S"
PX15X-XAX-XXX	14-7/8" (377.8 mm)	1-3/4" (44.5 mm)	7-7/32" (183.4 mm)	14-23/32" (373.9 mm)	1/2" (12.7 mm)
PX15X-XCX-XXX	14-5/8" (371.5 mm)	1-3/4" (44.5 mm)	7-3/16" (182.6 mm)	14-1/2" (368.3 mm)	1/4" (6.4 mm)
PX15X-XHX-XXX	14-9/16" (370.0 mm)	3-1/8" (79.4 mm)	7-3/16" (182.6 mm)	14-1/2" (368.3 mm)	1/4" (6.4 mm)
PX15X-ASX-XXX, -BSX	14-25/32" (375.5 mm)	1-3/4" (44.5 mm)	7-9/32" (185.0 mm)	14-13/16" (375.5 mm)	15/32" (11.4 mm)
PX15X-YSX-XXX	14-9/16" (370.0 mm)	3-1/8" (79.4 mm)	7-9/32" (185.0 mm)	14-9/16" (370.0 mm)	15/32" (11.4 mm)

	"E"	"T"
PX15A-XXX-XXX	N / A	14-1/32" (356.2 mm)
PX15R-XXX-XXX	11-3/32" (281.3 mm)	N / A
PX15S-XXX-XXX	N / A	13-7/8" (352.4 mm)

Figure 4